BERRIER JUNIOR SURFACE RECESSED BASE

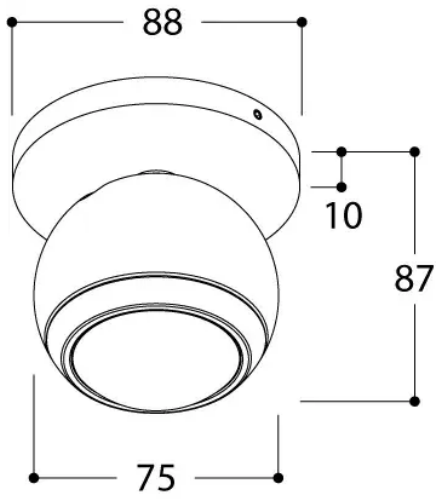

General Specifications

Article code	456402
Product name	BERRIER JUNIOR CEILING MOUNTED 350mA 2700K
Finish housing	TEXTURED BLACK
Finish focus	TEXTURED BLACK
Adjustability tilt	45°
Adjustability rotation	359°
Mounting type	CEILING MOUNTED
Cut-out	DIA 42 mm
Installation height	50 mm
Weight	0.6 kg
Location	Indoor
IP rating	20
LED lifespan @L80B10	50.000 hours
SDCM	3

Photometric Specifications

Colour temperature	2700K
CRI	90
Light source	LUXEON M
LED output	1 x 400 lm
Luminaire output	1 x 218 lm
Beam angle	60°

Electrical Specifications

Input	350mA DC
Power	1 x 3,82 W
Forward voltage	1 x 10,95 V
Dimmable	DEPENDING ON DRIVER
Driver	REMOTE
Energy Efficiency Class	E
Electrical class	3
LED Efficiency	105 lm/W

Optional Accessories

BERRIER JUNIOR SOFT BEAM FILTER ACCESSORY (456099)