KALEBAS TABLE

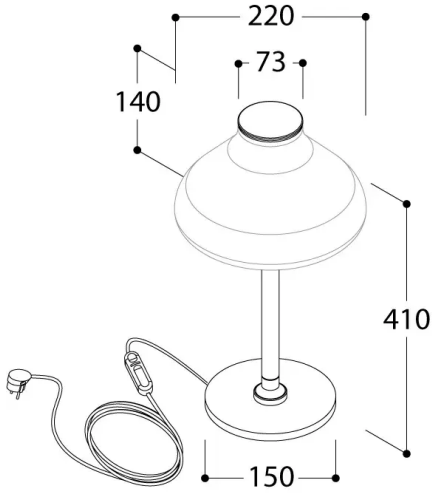

General Specifications

Article code	488323
Product name	KALEBAS TABLE 2700K (excl. glass)
Finish housing	ANODIC GOLD
Finish mainscord	MAINSCORD BLACK
Adjustability tilt	No
Adjustability rotation	No
Mounting type	STAND ALONE
Weight	2.5 kg
Location	Indoor
IP rating	20
LED lifespan @L80B10	50.000 hours
SDCM	3

Electrical Specifications

Input	230V 50-60Hz AC
Power	1 x 8,3 W
Dimmable	DIMMABLE ON MAINSCORD
Driver	Dimmer incorporated
Energy Efficiency Class	E
Electrical class	2
LED Efficiency	128,6 lm/W

Photometric Specifications

Colour temperature	2700K
CRI	92
Light source	LED ARRAY
LED output	1 x 1067 lm
Luminaire output	1 x 854 lm
Beam angle	85°

Obligatory Accessories

Obligatory	ACCESSORY KALEBAS GLASS SHELL (488290), ACCESSORY KALEBAS GLASS SHELL (488291), ACCESSORY KALEBAS GLASS SHELL (488292), ACCESSORY KALEBAS GLASS SHELL (488293)