CLEVER TRACK 230V

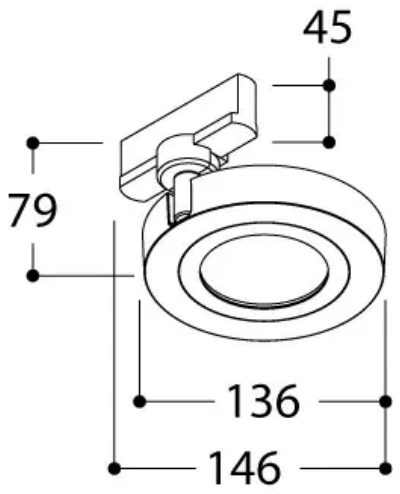

General Specifications

Article code	291410
Product name	CLEVER TRACK 230V 24° 2700K MAINS DIMMABLE
Finish housing	TEXTURED BLACK
Adjustability tilt	90°
Adjustability rotation	359°
Mounting type	TRACK
Weight	0.6 kg
Location	Indoor
IP rating	20
LED lifespan @L80B10	50.000 hours
SDCM	3

Photometric Specifications

Colour temperature	2700K
CRI	90
Light source	ADA AC
LED output	1 x 900 lm
Luminaire output	1 x 723 lm
Beam angle	24°

Electrical Specifications

Input	230V 50-60Hz AC
Power	1 x 10 W
Dimmable	MAINS DIMMABLE
Driver	CONVERTER INCORPORATED
Energy Efficiency Class	F
Electrical class	1
LED Efficiency	90 lm/W

Optional Accessories

CLEVER HONEYCOMB RING ACCESSORY (291090), CLEVER ANTIGLARE RING ACCESSORY (291099)