# CLEVER M10

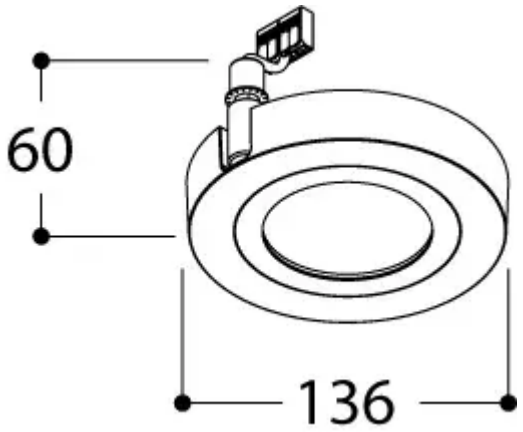


## General Specifications

| | |
|---|---|
| Article code | 291500 |
| Product name | CLEVER M10 230V 24° 2700K MAINS DIMMABLE |
| Finish housing | TEXTURED WHITE |
| Adjustability tilt | 90° |
| Adjustability rotation | 315° |
| Mounting type | CEILING MOUNTED |
| Weight | 0.5 kg |
| Location | Indoor |
| IP rating | 20 |
| LED lifespan @L80B10 | 50.000 hours |
| SDCM | 3 |

## Photometric Specifications

| | |
|---|---|
| Colour temperature | 2700K |
| CRI | 90 |
| Light source | ADA AC |
| LED output | 1 x 900 lm |
| Luminaire output | 1 x 723 lm |
| Beam angle | 24° |

## Electrical Specifications

| | |
|---|---|
| Input | 230V 50-60Hz AC |
| Power | 1 x 10 W |
| Dimmable | MAINS DIMMABLE |
| Driver | CONVERTER INCORPORATED |
| Energy Efficiency Class | F |
| Electrical class | 1 |
| LED Efficiency | 90 lm/W |

## Optional Accessories

CLEVER HONEYCOMB RING ACCESSORY (291090), CLEVER ANTIGLARE RING ACCESSORY (291099)