CEDRUS FIX

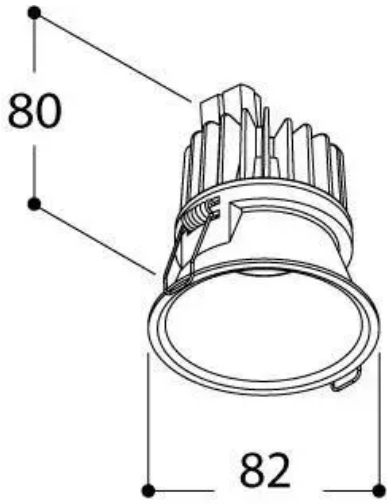

General Specifications

Article code	348727
Product name	CEDRUS QUANTUM TORSION 350mA 36° 2700K
Finish housing	TEXTURED BLACK
Adjustability tilt	No
Adjustability rotation	No
Type de montage	DOWNLIGHTS
Cut-out	DIA 76 mm
Installation height	85 mm
Weight	0.2 kg
Location	Indoor
Indice de protection IP	54
Durée de vie des LED @ L80B10	50.000 hours
SDCM	3

Photometric Specifications

température de la couleur	2700K
CRI	90
source lumineuse	BRIDGELUX
Flux sortant	1 x 600 lm
Luminaire output	1 x 495 lm
angle de faisceau	36°

Electrical Specifications

Input	350mA DC
Power	1 x 6,2 W
Forward voltage	1 x 17,7 V
Dimmable	DEPENDING ON DRIVER
Driver	REMOTE
Energy Efficiency Class	F
Electrical class	3
Efficacité des LED	96,8 lm/W

Optional Accessories

CEDRUS Q - FUNNEL FIX - MIX ROUND 6-13 FRAME FOR PLASTER (348100)