MICRO TOMMY 2 RECESSED

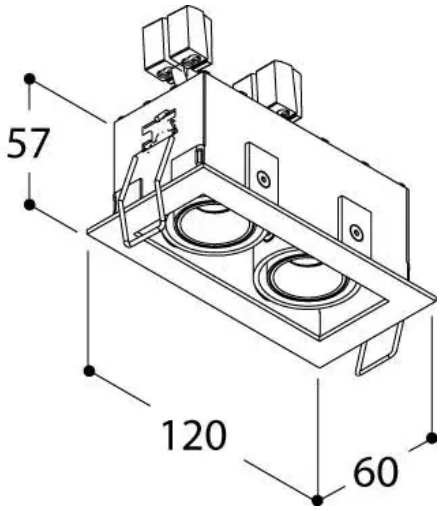

General Specifications

Article code	419206
Product name	MICRO TOMMY 2 TORSION HALOSPHERE
Finish housing	TEXTURED BLACK
Finish upper part	TEXTURED BLACK
Finish focus	TEXTURED BLACK
Adjustability tilt	20°
Adjustability rotation	35°
Type de montage	DOWNLIGHTS
Cut-out	114 x 52 mm
Installation height	60 mm
Weight	0.3 kg
Location	Indoor
Indice de protection IP	20
Durée de vie des LED @ L80B10	50.000 hours
SDCM	3

Photometric Specifications

température de la couleur	1800-3000K
CRI	90
source lumineuse	BRIDGELUX
Flux sortant	2 x 455 lm
Luminaire output	2 x 389 lm
angle de faisceau	40°

Electrical Specifications

Input	250mA DC
Power	2 x 4,25 W
Forward voltage	2 x 17 V
Dimmable	DEPENDING ON DRIVER
Driver	REMOTE
Energy Efficiency Class	E
Electrical class	3
Efficacité des LED	115 lm/W

Optional Accessories

MICRO TOMMY 2 FRAME FOR PLASTER (419299), MICRO TOMMY 2 FRAME + BOX FOR PLASTER (419297)