CLEVER RECESSED BASE

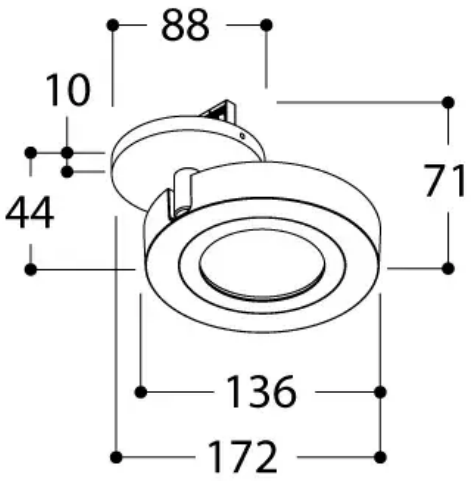

General Specifications

Article code	291200
Product name	CLEVER RECESSED BASE LARGE 230V 24° 2700K MAINS DIMMABLE
Finish housing	TEXTURED WHITE
Adjustability tilt	90°
Adjustability rotation	315°
Type de montage	CEILING MOUNTED
Cut-out	DIA 42 mm
Installation height	40 mm
Weight	0.6 kg
Location	Indoor
Indice de protection IP	20
Durée de vie des LED @ L80B10	50.000 hours
SDCM	3

Photometric Specifications

température de la couleur	2700K
CRI	90
source lumineuse	ADA AC
Flux sortant	1 x 900 lm
Luminaire output	1 x 723 lm
angle de faisceau	24°

Electrical Specifications

Input	230V 50-60Hz AC
Power	1 x 10 W
Dimmable	MAINS DIMMABLE
Driver	CONVERTER INCORPORATED
Energy Efficiency Class	F
Electrical class	1
Efficacité des LED	90 lm/W

Optional Accessories

CLEVER HONEYCOMB RING ACCESSORY (291090), CLEVER ANTIGLARE RING ACCESSORY (291099)