CLEVER M10

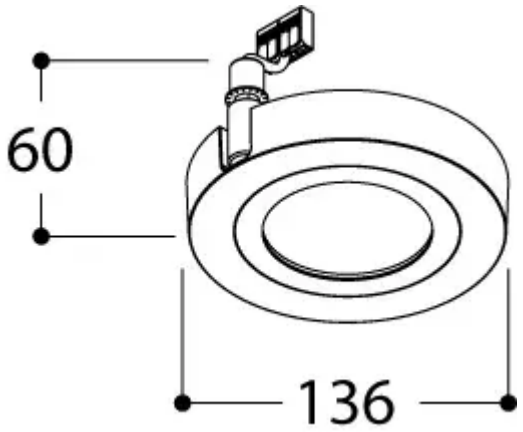

Algemene specificaties

Artikelcode	291500
Productnaam	CLEVER M10 230V 24° 2700K MAINS DIMMABLE
Afwerking	TEXTURED WHITE
Adjustability tilt	90°
Adjustability rotation	315°
Mounting type	CEILING MOUNTED
Gewicht	0.5 kg
Locatie	Indoor
IP rating	20
LED lifespan @L80B10	50.000 hours
SDCM	3

Fotometrische specificaties

Kleurtemperatuur	2700K
CRI	90
Lichtbron	ADA AC
LED output	1 x 900 lm
Luminaire output	1 x 723 lm
Stralingshoek	24°

Elektrische specificaties

Input	230V 50-60Hz AC
Power	1 x 10 W
Dimbaar	MAINS DIMMABLE
Driver	CONVERTER INCORPORATED
Energy Efficiency Class	F
Elektrische klasse	1
LED Efficiency	90 lm/W

Optional Accessories

CLEVER HONEYCOMB RING ACCESSORY (291090), CLEVER ANTIGLARE RING ACCESSORY (291099)