TAL nv
Moortelmeers 23
B-8740 PITTEM
BELGIUM

T: +32(0)51 46 43 41
F: +32(0)51 46 43 42
E: info@tal.be
www.tal.be

MADE IN BELGIUM 02/002/2022 - VERSION 3

name PROTUT WITH M10

Three possible situations :

A. M10 located at end profile
B. M10 located next to ledsystem
C. M10 located next to UGR ledsystem.

voltage	230V AC - 50Hz
gear	230V (without conv.) / 250+350mA (with conv.)
ip/class	IP20 - class1
application	Ceiling mounted
orientability	Not orientable
dimmability	230V (see luminaires for dimmability)
	250mA (mains dimmable LC via dimlist N)
	350mA (mains dimmable LC via dimlist H)
weight	0,3-1kg

INSTALLATIE- EN ONDERHOUDSRICHTLIJNEN m.b.t. FABRIEKSGARANTIE.
1. DE VERBINDINGEN EN HET UITTESTEN VAN DEZE TOESTELLEN DIENEN ALTIJD TE GEBEUREN DOOR EEN ERKEND ELECTRO-INSTALLATEUR.
2. DEZE VERLICHTINGSTOESTELLEN MOETEN GE"NSTALLEERD, VERBONDEN EN GETEST WORDEN VOLGENS DE NATIONAAL GELDENDE REGLEMENTEN OP DE ELECTRISCHE INSTALLATIES (BELGIE?, A.R.E.I., DUITSLAND: DIN VDE 0100 TEIL 559 A2, ...; DEZE OPSOMMING IS LOUTER INFORMATIEF)
3. DE TECHNISCHE BUSLUITER MOET GEZIEN WORDEN ALS ONDERDEEL VAN DE ALGEMENE VERKOOPSVOORWAARDEN VAN TAL N.V.
4. DE ELECTRO-INSTALLATEUR IS VERANTWOORDELIJK VOOR HET GEBRUIKEN VAN VOORSCHAKELAPPARATUUR DIE VOLDOET AAN DE GELDENDE CE EN EMC NORMEN.
5. VERVANG DE LAMP (-EN) ALTIJD MET DE GROOTSTE ZORG, ZE IS (ZIJN) UITERST BREEKBAAR.
6. OPGEPAST: PLAATS NOOIT DE LAMP MET BLOTE HANDEN, GEBRUIK ALTIJD EEN DOEK !

INSTRUCTIONS D'INSTALLATION ET D'ENTRETIEN A RESPECTER VIS-A-VIS DE LA GARANTIE.
1. LE PLACEMENT, LE RACCORDEMENT ET L'ESSAI DE CET APPAREIL DOIVENT TOUJOURS E¼TRE EFFECTUES PAR UN INSTALLATEUR ELECTRICIEN AGREE.
2. LES LUMINAIRES DOIVENT E¼TRE INSTALLEZ, BRANCHES ET TESTES SUIVANT LE REGLEMENT NATIONAL SUR LES INSTALLATIONS ELECTRIQUES EN VIGUEUR. (BELGIQUE, A.R.E.I., ALLEMAGNE: DIN VDE 0100 TEIL 559 A2, ...; CETTE ENUMERATION EST INDICATIVE)
3. CE MANUEL D'INSTALLATION TECHNIQUE REPRESENTE UNE PARTIE DES CONDITIONS GENERALES DE VENTE DE TAL N.V.
4. L'ELECTRO-INSTALLATEUR EST RESPONSABLE POUR L'USAGE DE BALLASTS, TRANSFO'S,...CONFORMES AUX NORMES CE ET EMC EN VIGUEUR.
5. REMPLACEZ TOUJOURS L'AMPOULE (LES AMPOULES) AVEC PRUDENCE; ELLE(-S) EST (SONT) TRES FRAGILE (-S).
6. ATTENTION: NE JAMAIS REMPLACER L'AMPOULE AUX MAINS NUES, UTILISEZ TOUJOURS UN CHIFFON !

INSTALLATION AND MAINTENANCE INSTRUCTIONS IN VIEW OF THE MANUFACTURER'S GUARANTEE.
1. THE CONNECTION AND TESTING OF THE DEVICES SHOULD ALWAYS BE PERFORMED BY A RECOGNIZED ELECTRICIAN.
2. THESE LIGHTING DEVICES NEED TO BE INSTALLED, CONNECTED AND TESTED FOLLOWING THE OFFICIAL NATIONAL INSTRUCTION GUIDE FOR ELECTRICAL INSTALLATIONS (BELGIUM, A.R.E.I., GERMANY: DIN VDE 0100 TEIL 559 A2, ...; THIS ENUMERATION IS JUST AN INDICATION)
3. THIS TECHNICAL ENCLOSURE NEEDS TO BE ADDED TO THE GENERAL SALES CONDITION OF THE TAL N.V.
4. THE ELECTRO TECHNICIAN IS RESPONSABLE TO USE BALLASTS, TRANSFORMERS,...WHICH MEET THE VALID CE AND EMC RULES.
5. ALWAYS REPLACE THE LAMP (-S) WITH UTMOST CAUTIOUSNESS, THE LAMP (-S) IS (ARE) VERY FRAGILE.
6. ATTENTION: NEVER REPLACE THE LAMP WITH BARE HANDS, ALWAYS USE A CLOTH !

MONTAGE- UN UNTERHALT INSTRUCTIONEN ZU BEACHTEN MIT BEZUG AUF DER GARANTIE.
1. DIE MONTAGE , DER ANSCHLUSS UND DAS AUSTESTEN DER LEUCHTEN SOLL IMMER VON EINEM ZUSTA€NDIGEN ELECTRO-INSTALLATEUR AUSGEFUHRT WERDEN.
2. DIESE LEUCHTEN MŸUSSEN INSTALLIERT, ANGESCHLOSSEN UND GETESTET WERDEN NACH DER ALLGEMEINEN NAZIONALEN REGLEMENTATION UBER DIE ELEKTRISCHE INSTALLATIONEN (BELGIEN, A.R.E.I., DEUTSCHLAND: DIN VDE 0100 TEIL 559 A2, ...; DIESE AUFSTELLUNG GESCHICHT DURCH EXEMPLATIVEN TITEL UND KANN NICHT ALS LIMITATIV ODER EXHAUTIV BETRACHTET WERDEN).
3. DIESE TECHNISCHE GEBRAUCHSANWEISUNG GEHORT ZU DEN ALLGEMEINEN VERKAUFSBEDINGUNGEN VON TAL N.V.
4. DER ELEKTRO-INSTALLATEUR IST VERANTWORTLICH FUR DAS VERWENDEN VON CE UND EMC GEPRUFTE VORSCHALTGERE€TE.
5. DIE LAMPE(-N) SOLL(-EN) IMMER SERH VORSICHTIG ERSA€TZT WERDEN.
6. VORSICHT: MAN DARF NIE DIE LAMPE MIT DEN NACKTEN HA€NDEN BERUHREN, MAN SOL IMMER EINEN TUCH BENUTZEN !

A. M10 LOCATED AT END OF PROFILE.

1 Included:

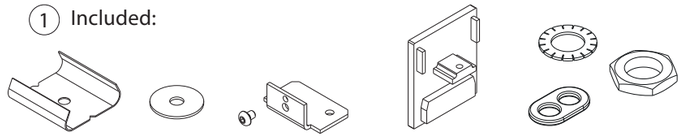

Spring + washer Qty depending on length of base

Bracket + screw 2x

Endcap 2x

Strain relief, washer and nut for suspended luminaires

2 Check backside of base to detemine position of the springs.
Mount the ceiling springs in one straight line.
Plugs and screws according to the type of ceiling (not included)

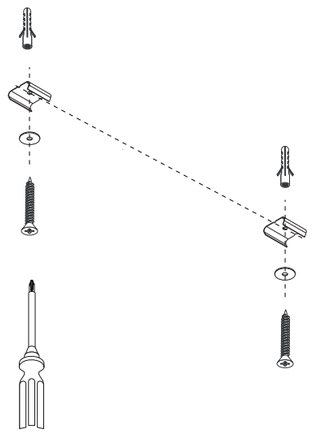

3 Mount the luminaires on the cover.
(see manual luminaire)
Make primary earthing connection between profile and cover.
Connect the luminaires.

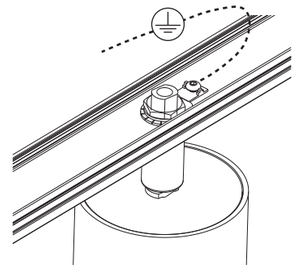

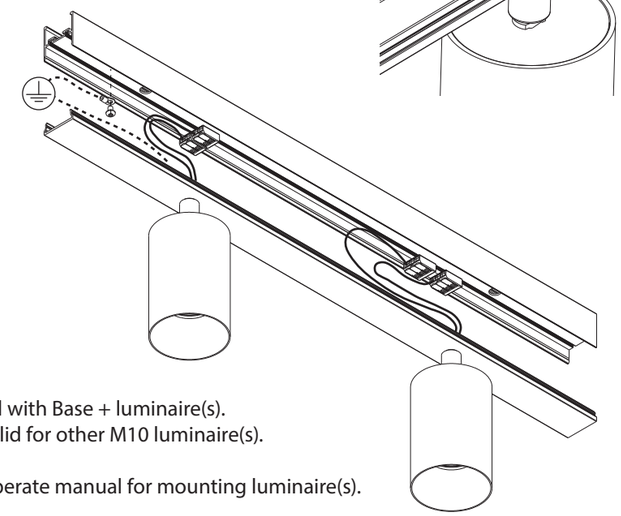

Manual with Base + luminaire(s).
Also valid for other M10 luminaire(s).

See seperate manual for mounting luminaire(s).

for suspended luminaires :
use the strain relief (8shape) included in the bag.

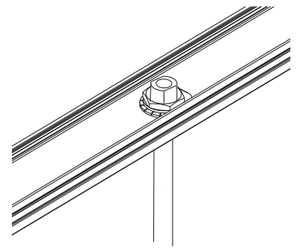

4 Click the cover in the profile.
Align at the end.

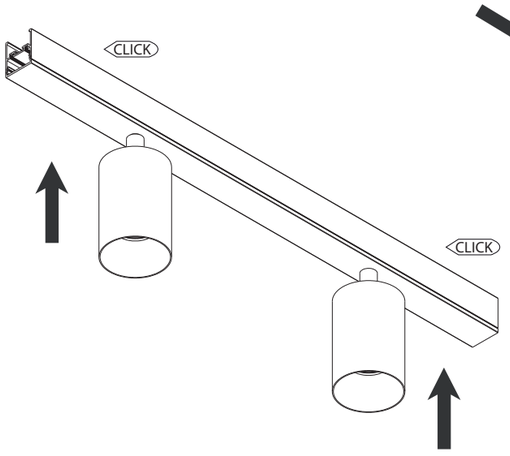

5 Mount the brackets and the endcaps
1. Slide the bracket in the cover and fix with screw.
(bracket is the fall protection for the cover)

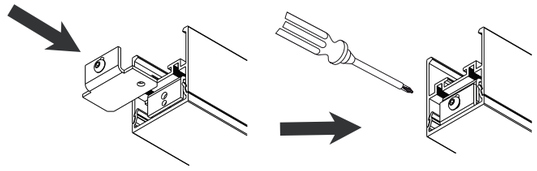

2. Slide the endcap in the profile and fix with screw.

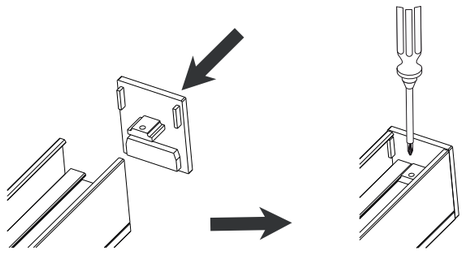

6 Connect power supply and click profile to ceiling

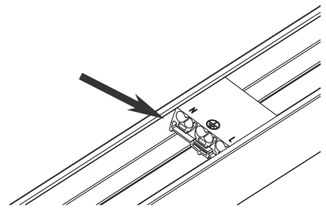

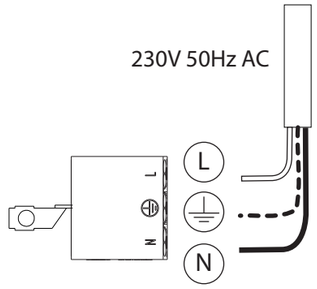

Position the profile over the spring and push hard.

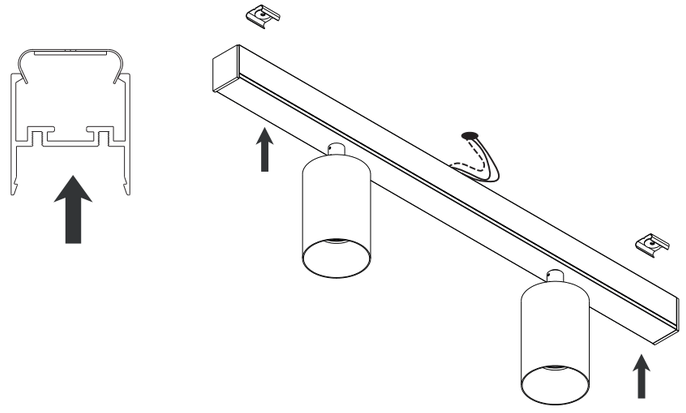

TAL nv
Moortelmeers 23
B-8740 PITTEM
BELGIUM

T: +32(0)51 46 43 41
F: +32(0)51 46 43 42
E: info@tal.be
www.tal.be

B. M10 LOCATED NEXT TO LEDSYSTEM.

4 Click the cover in the profile.

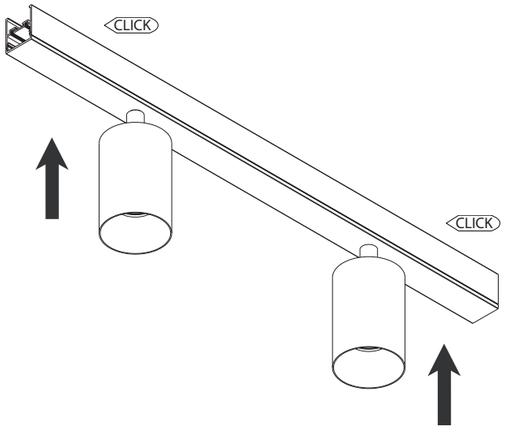

5 Mount the brackets

1. Slide the bracket in the cover and fix with screw.
   (bracket is the fall protection for the cover)

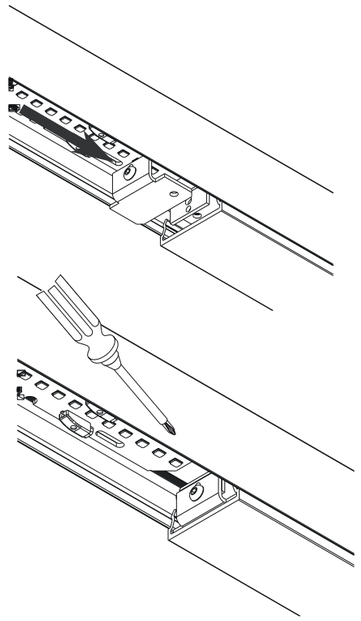

2. Click in the diffuser.

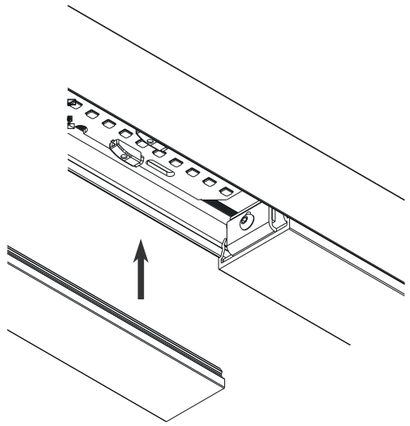

C. M10 LOCATED NEXT TO UGR LEDSYSTEM.

4 Mount the brackets in the cover of the UGR

The bracket is half in the profile.

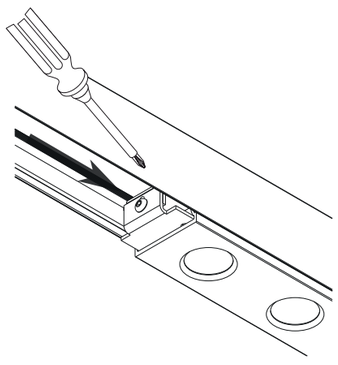
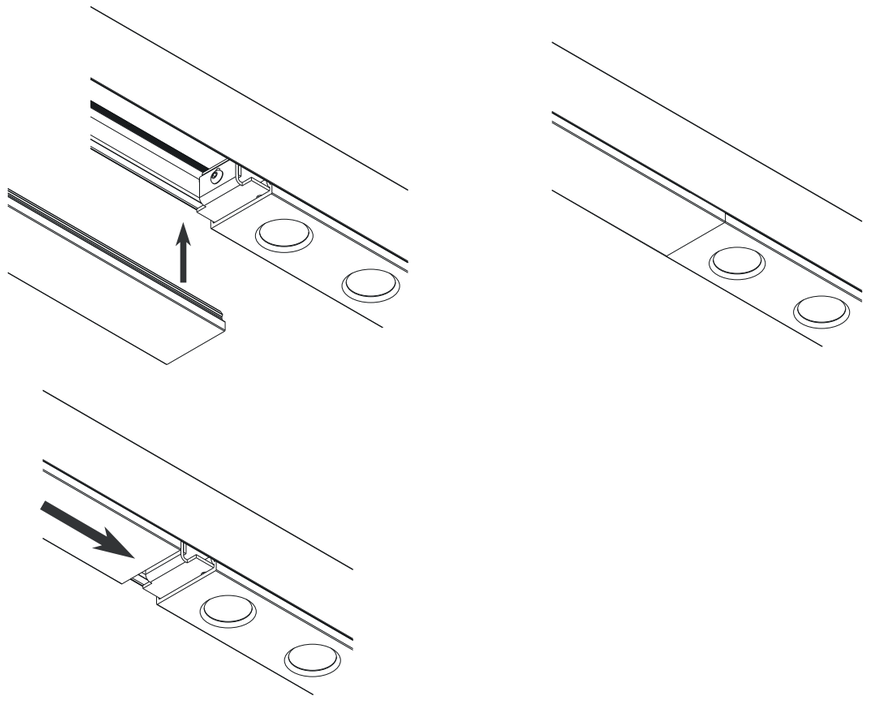
5 Click the M10 cover (with luminaires) in the profile next to the bracket.
The first 15 cm is enough, the slide over the bracket and click in the rest.