TAL nv
Moortelmeers 23
B-8740 PITTEM
BELGIUM

T: +32(0)51 46 43 41
F: +32(0)51 46 43 42
E: info@tal.be
www.tal.be

MADE IN BELGIUM 01/01/2025 - VERSION 6

CE

name	CEDRUS QUANTUM 350mA
ref	ALL REFS SEE TABLE ON VERSO PAGE
safe distance to object	- 0,1m -
lamptype	COB 8mm (ct=2700K, cri=90, sdcm=3, lm=600) (ct=3000K, cri=90, sdcm=3, lm=622)
fitting	None
watt	6,2W (Vf = 17,7V) F A G
amperage - current	Max. 350mA DC
symbol	
gear	Converter not incorporated
ip/class	IP54 (for wet indoors f.e. bathrooms only) III
application	Interior - ceiling mounted F
orientability	NONE
dimmability	PWM or CCR dimmable
weight	0.2 (348100: CEDRUS QUANTUM FRAME FOR PLASTER)

TORSION

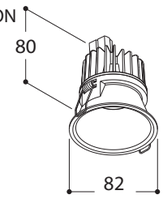

LEAF*

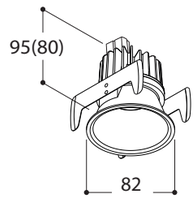

INSTRUCTIONS D'INSTALLATION ET D'ENTRETIEN A RESPECTER VIS-A-VIS DE LA GARANTIE.
1. LE PLACEMENT, LE RACCORDEMENT ET L'ESSAI DE CET APPAREIL DOIVENT TOUJOURS E¾TRE EFFECTUES PAR UN INSTALLATEUR ELECTRICIEN AGREE.
2. LES LUMINAIRES DOIVENT E¾TRE INSTALLEZ, BRANCHES ET TESTES SUIVANT LE REGLEMENT NATIONAL SUR LES INSTALLATIONS ELECTRIQUES EN VIGUEUR. (BELGIQUE, A.R.E.I., ALLEMAGNE: DIN VDE 0100 TEIL 559 A2, ...; CETTE ENUMERATION EST INDICATIVE)
3. CE MANUEL D'INSTALLATION TECHNIQUE REPRESENTE UNE PARTIE DES CONDITIONS GENERALES DE VENTE DE TAL N.V.
4. L'ELECTRO-INSTALLATEUR EST RESPONSABLE POUR L'USAGE DE BALLASTS, TRANSFO'S,...CONFORMES AUX NORMES CE ET EMC EN VIGUEUR.
5. REMPLACEZ TOUJOURS L'AMPOULE (LES AMPOULES) AVEC PRUDENCE; ELLE(-S) EST (SONT) TRES FRAGILE (-S).
6. ATTENTION: NE JAMAIS REMPLACER L'AMPOULE AUX MAINS NUES, UTILISEZ TOUJOURS UN CHIFFON !

INSTALLATION AND MAINTENANCE INSTRUCTIONS IN VIEW OF THE MANUFACTURER'S GUARANTEE.
1. THE CONNECTION AND TESTING OF THE DEVICES SHOULD ALWAYS BE PERFORMED BY A RECOGNIZED ELECTRICIAN.
2. THESE LIGHTING DEVICES NEED TO BE INSTALLED, CONNECTED AND TESTED FOLLOWING THE OFFICIAL NATIONAL INSTRUCTION GUIDE FOR ELECTRICAL INSTALLATIONS (BELGIUM, A.R.E.I., GERMANY: DIN VDE 0100 TEIL 559 A2, ...; THIS ENUMERATION IS JUST AN INDICATION)
3. THIS TECHNICAL ENCLOSURE NEEDS TO BE ADDED TO THE GENERAL SALES CONDITION OF THE TAL N.V.
4. THE ELECTRO TECHNICIAN IS RESPONSABLE TO USE BALLASTS, TRANSFORMERS,...WHICH MEET THE VALID CE AND EMC RULES.
5. ALWAYS REPLACE THE LAMP (-S) WITH UTMOST CAUTIOUSNESS, THE LAMP (-S) IS (ARE) VERY FRAGILE.
6. ATTENTION: NEVER REPLACE THE LAMP WITH BARE HANDS, ALWAYS USE A CLOTH !

MONTAGE- UN UNTERHALT INSTRUCTIONEN ZU BEACHTEN MIT BEZUG AUF DER GARANTIE.
1. DIE MONTAGE , DER ANSCHLUSS UND DAS AUSTESTEN DER LEUCHTEN SOLL IMMER VON EINEM ZUSTA€NDIGEN ELECTRO-INSTALLATEUR AUSGEFUHRT WERDEN.
2. DIESE LEUCHTEN MŸUSSEN INSTALLIERT, ANGESCHLOSSEN UND GETESTET WERDEN NACH DER ALLGEMEINEN NAZIONALEN REGLEMENTATION UBER DIE ELEKTRISCHE INSTALLATIONEN (BELGIEN, A.R.E.I., DEUTSCHLAND: DIN VDE 0100 TEIL 559 A2, ...; DIESE AUFSTELLUNG GESCHICHT DURCH EXEMPLATIVEN TITEL UND KANN NICHT ALS LIMITATIV ODER EXHAUTIV BETRACHTET WERDEN).
3. DIESE TECHNISCHE GEBRAUCHSANWEISUNG GEHORT ZU DEN ALLGEMEINEN VERKAUFSBEDINGUNGEN VON TAL N.V.
4. DER ELEKTRO-INSTALLATEUR IST VERANTWORTLICH FUR DAS VERWENDEN VON CE UND EMC GEPRUFTE VORSCHALTGER€ATE.
5. DIE LAMPE(-N) SOLL(-EN) IMMER SERH VORSICHTIG ERSA€TZT WERDEN.
6. VORSICHT: MAN DARF NIE DIE LAMPE MIT DEN NACKTEN HA€NDEN BERUHREN, MAN SOL IMMER EINEN TUCH BENUTZEN !

① MAKE HOLE DIA 76mm (all models)

MIN. INSTALLATION DEPTH IN HOLLOW CEILINGS: 85mm
MIN. CEILING THICKNESS: 1mm
MAX. CEILING THICKNESS: 20mm

Torsion (only for hollow ceilings) :

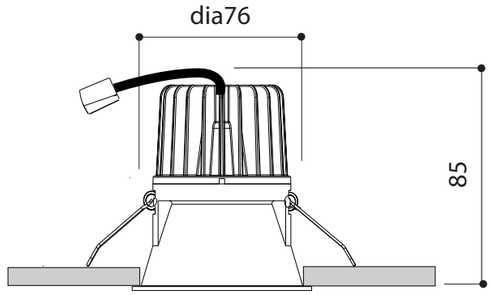

Leaf *(for all ceiling types) :

MIN. CEILING THICKNESS: 8mm
(no MAX. CEILING THICKNESS)

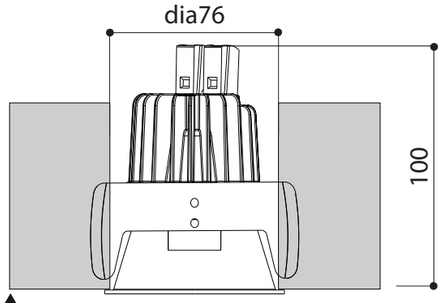

MIN. INSTALLATION DEPTH IN SOLID CEILINGS & LEAF: 100mm

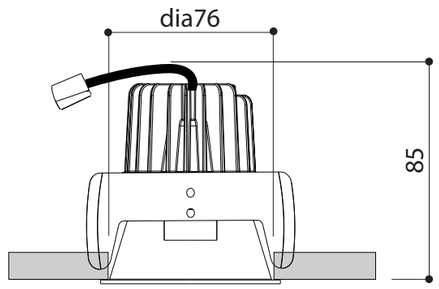

MIN. INSTALLATION DEPTH IN HOLLOW CEILINGS & LEAF: 85mm

ALWAYS DISCONNECT MAINS POWER SUPPLY
FROM CONVERTER BEFORE SWITCHING "ON"
LED LUMINAIRES TO PREVENT HOT PLUGGING ISSUES

INSTALLATIE- EN ONDERHOUDSRICHTLIJNEN m.b.t. FABRIEKSGARANTIE.
1. DE VERBINDINGEN EN HET UITTESTEN VAN DEZE TOESTELLEN DIENEN ALTIJD TE GEBEUREN DOOR EEN ERKEND ELECTRO-INSTALLATEUR.
2. DEZE VERLICHTINGSTOESTELLEN MOETEN GE"NSTALLEERD, VERBONDEN EN GETEST WORDEN VOLGENS DE NATIONAAL GELDENDE REGLEMENTEN OP DE ELECTRISCHE INSTALLATIES (BELGIE?, A.R.E.I., DUITSLAND: DIN VDE 0100 TEIL 559 A2, ...; DEZE OPSOMMING IS LOUTER INFORMATIEF)
3. DE TECHNISCHE BIJSLUITER MOET GEZIEN WORDEN ALS ONDERDEEL VAN DE ALGEMENE VERKOOPSVOORWAARDEN VAN TAL N.V.
4. DE ELECTRO-INSTALLATEUR IS VERANTWOORDELIJK VOOR HET GEBRUIKEN VAN VOORSCHAKELAPPARATUUR DIE VOLDOET AAN DE GELDENDE CE EN EMC NORMEN.
5. VERVANG DE LAMP (-EN) ALTIJD MET DE GROOTSTE ZORG, ZE IS (ZIJN) UITERST BREEKBAAR.
6. OPGEPAST: PLAATS NOOIT DE LAMP MET BLOTE HANDEN, GEBRUIK ALTIJD EEN DOEK !

② MAKE CONNECTION IN TERMINAL BLOCKS (POWER SUPPLY IS SWITCHED OFF)

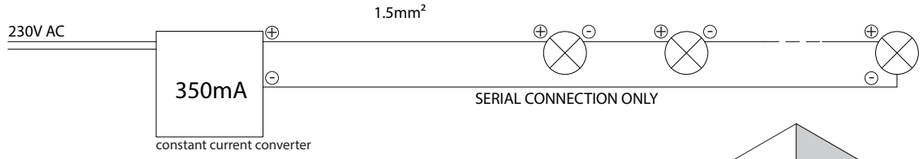

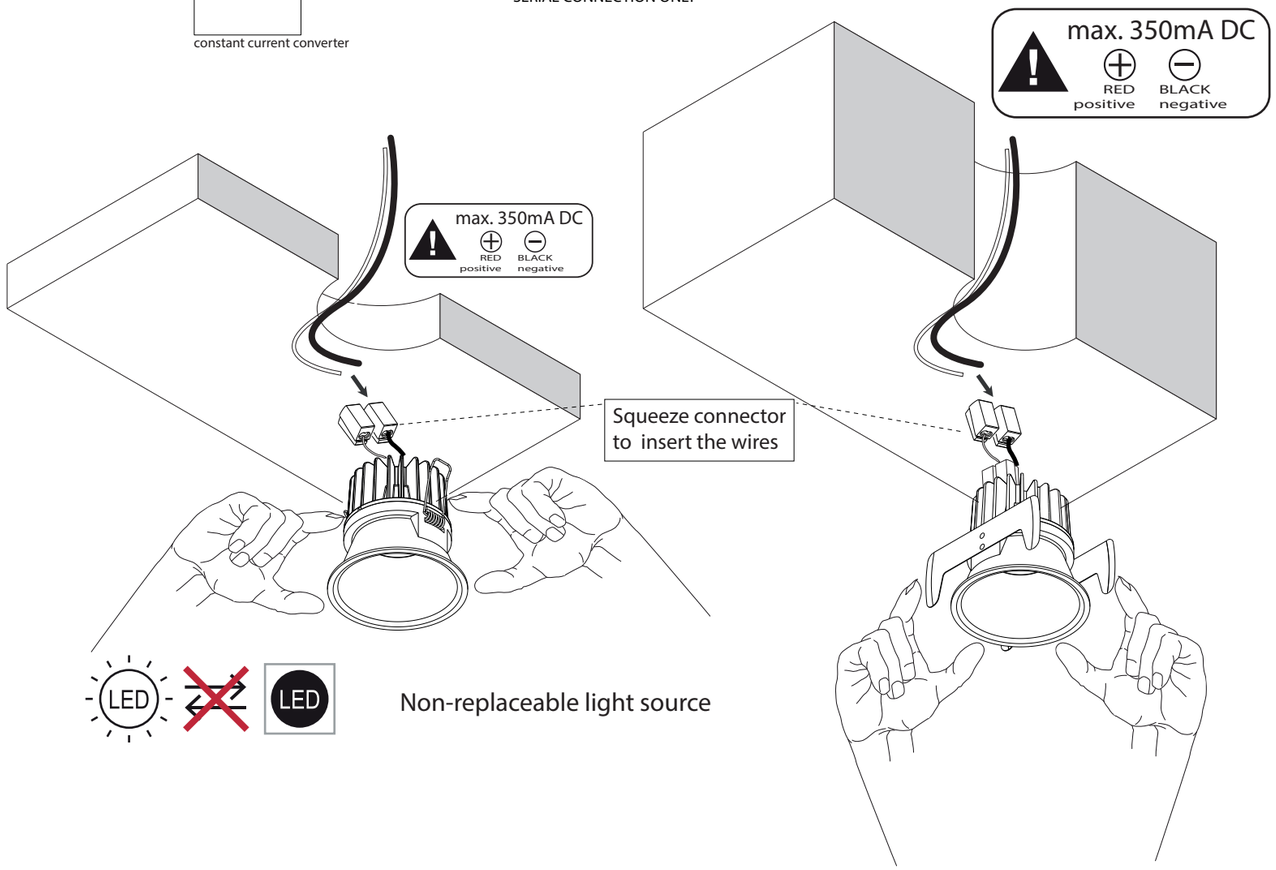

LED LED Non-replaceable light source

③ PUSH LUMINAIRE GENTLY INTO HOLE BY DEFORMING 2 TORSION SPRINGS UPWARDS BY HAND

③ PUSH LUMINAIRE GENTLY INTO HOLE BY DEFORMING 2 LEAF SPRINGS INWARDS BY HAND*

④ SWITCH ON MAINS POWER SUPPLY

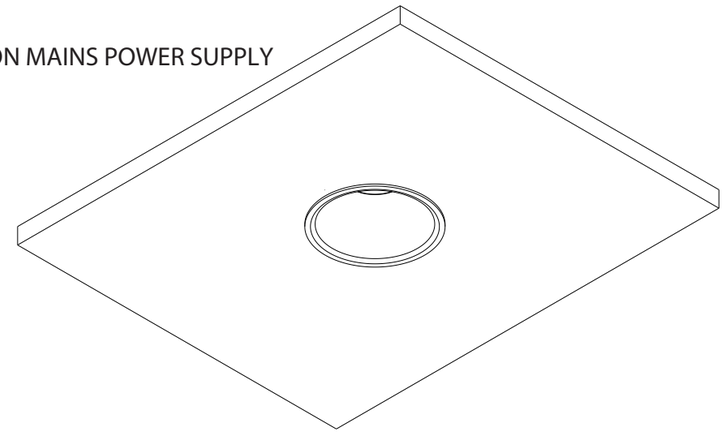

TAL nv
Moortelmeers 23
B-8740 PITTEM
BELGIUM

T: +32(0)51 46 43 41
F: +32(0)51 46 43 42
E: info@tal.be
www.tal.be

name CEDRUS QUANTUM

348822	CEDRUS QUANTUM LEAF 24° 2700K CRI90	BRONZE ANTIQUE
348824	CEDRUS QUANTUM LEAF 24° 2700K CRI90	TEXTURED BLACK
348845	CEDRUS QUANTUM LEAF 24° 2700K CRI90	TEXTURED WHITE
348808	CEDRUS QUANTUM LEAF 24° 3000K CRI90	BRONZE ANTIQUE
348820	CEDRUS QUANTUM LEAF 24° 3000K CRI90	TEXTURED BLACK
348843	CEDRUS QUANTUM LEAF 24° 3000K CRI90	TEXTURED WHITE
348825	CEDRUS QUANTUM LEAF 36° 2700K CRI90	BRONZE ANTIQUE
348827	CEDRUS QUANTUM LEAF 36° 2700K CRI90	TEXTURED BLACK
348848	CEDRUS QUANTUM LEAF 36° 2700K CRI90	TEXTURED WHITE
348829	CEDRUS QUANTUM LEAF 36° 3000K CRI90	BRONZE ANTIQUE
348828	CEDRUS QUANTUM LEAF 36° 3000K CRI90	TEXTURED BLACK
348849	CEDRUS QUANTUM LEAF 36° 3000K CRI90	TEXTURED WHITE
348821	CEDRUS QUANTUM LEAF 60° 2700K CRI90	BRONZE ANTIQUE
348823	CEDRUS QUANTUM LEAF 60° 2700K CRI90	TEXTURED BLACK
348844	CEDRUS QUANTUM LEAF 60° 2700K CRI90	TEXTURED WHITE
348807	CEDRUS QUANTUM LEAF 60° 3000K CRI90	BRONZE ANTIQUE
348819	CEDRUS QUANTUM LEAF 60° 3000K CRI90	TEXTURED BLACK
348842	CEDRUS QUANTUM LEAF 60° 3000K CRI90	TEXTURED WHITE
348722	CEDRUS QUANTUM TORSION 24° 2700K CRI90	BRONZE ANTIQUE
348724	CEDRUS QUANTUM TORSION 24° 2700K CRI90	TEXTURED BLACK
348745	CEDRUS QUANTUM TORSION 24° 2700K CRI90	TEXTURED WHITE
348708	CEDRUS QUANTUM TORSION 24° 3000K CRI90	BRONZE ANTIQUE
348720	CEDRUS QUANTUM TORSION 24° 3000K CRI90	TEXTURED BLACK
348743	CEDRUS QUANTUM TORSION 24° 3000K CRI90	TEXTURED WHITE
348725	CEDRUS QUANTUM TORSION 36° 2700K CRI90	BRONZE ANTIQUE
348727	CEDRUS QUANTUM TORSION 36° 2700K CRI90	TEXTURED BLACK
348748	CEDRUS QUANTUM TORSION 36° 2700K CRI90	TEXTURED WHITE
348729	CEDRUS QUANTUM TORSION 36° 3000K CRI90	BRONZE ANTIQUE
348728	CEDRUS QUANTUM TORSION 36° 3000K CRI90	TEXTURED BLACK
348749	CEDRUS QUANTUM TORSION 36° 3000K CRI90	TEXTURED WHITE
348721	CEDRUS QUANTUM TORSION 60° 2700K CRI90	BRONZE ANTIQUE
348723	CEDRUS QUANTUM TORSION 60° 2700K CRI90	TEXTURED BLACK
348744	CEDRUS QUANTUM TORSION 60° 2700K CRI90	TEXTURED WHITE
348707	CEDRUS QUANTUM TORSION 60° 3000K CRI90	BRONZE ANTIQUE
348719	CEDRUS QUANTUM TORSION 60° 3000K CRI90	TEXTURED BLACK
348742	CEDRUS QUANTUM TORSION 60° 3000K CRI90	TEXTURED WHITE