TAL Moortelmeers 23, 8740 PITTEM - BELGIUM
Tel ++32(0)51 46 43 41 - Fax ++32(0)51 46 43 42 - info@tal.be - www.tal.be

MADE IN BELGIUM 05/11/2025 - VERSION 2

CE

name	NOBEL ELBOW EVO M10 350mA
ref	ALL REFS SEE TABLE ON VERSO PAGE

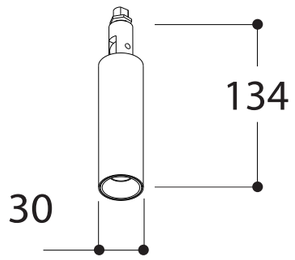

safe distance to object	- 0,1m -
lamptype	BRIDGELUX 476lm / 495lm* 2700K/3000K*
fitting	NONE
watt	4,1W (Vf = 11,8V) E A
voltage	350 mA - DC
symbol	
gear	converter not incorporated
ip/class	IP20 III
application	Wall - ceiling mounted F
orientability	359° rotating - 90° tilting
dimmability	CCR/PWM dimmable
weight	0.2
beamangle	15°/36°/50°
CRI	90
SDCM	3

INSTALLATIE- EN ONDERHOUDSRICHTLIJNEN m.b.t. FABRIEKSGARANTIE.
1. DE VERBINDINGEN EN HET UITTESTEN VAN DEZE TOESTELLEN DIENEN ALTIJD TE GEBEUREN DOOR EEN ERKEND ELECTRO-INSTALLATEUR.
2. DEZE VERLICHTINGSTOESTELLEN MOETEN GE"NSTALLEERD, VERBONDEN EN GETEST WORDEN VOLGENS DE NATIONAAL GELDENDE REGLEMENTEN OP DE ELECTRISCHE INSTALLATIES (BELGIE?, A.R.E.I., DUITSLAND: DIN VDE 0100 TEIL 559 A2, ...; DEZE OPSOMMING IS LOUTER INFORMATIEF)
3. DE TECHNISCHE BUSLUITER MOET GEZIEN WORDEN ALS ONDERDEEL VAN DE ALGEMENE VERKOOPSVOORWAARDEN VAN TAL N.V.
4. DE ELECTRO-INSTALLATEUR IS VERANTWOORDELIJK VOOR HET GEBRUIKEN VAN VOORSCHAKELAPPARATUUR DIE VOLDOET AAN DE GELDENDE CE EN EMC NORMEN.
5. VERVANG DE LAMP (-EN) ALTIJD MET DE GROOTSTE ZORG, ZE IS (ZIJN) UITERST BREEKBAAR.
6. OPGEPAST: PLAATS NOOIT DE LAMP MET BLOTE HANDEN, GEBRUIK ALTIJD EEN DOEK !

INSTRUCTIONS D'INSTALLATION ET D'ENTRETIEN A RESPECTER VIS-A-VIS DE LA GARANTIE.
1. LE PLACEMENT, LE RACCORDEMENT ET L'ESSAI DE CET APPAREIL DOIVENT TOUJOURS E¼TRE EFFECTUES PAR UN INSTALLATEUR ELECTRICIEN AGREE.
2. LES LUMINAIRES DOIVENT E¼TRE INSTALLEZ, BRANCHES ET TESTES SUIVANT LE REGLEMENT NATIONAL SUR LES INSTALLATIONS ELECTRIQUES EN VIGUEUR. (BELGIQUE, A.R.E.I., ALLEMAGNE: DIN VDE 0100 TEIL 559 A2, ...; CETTE ENUMERATION EST INDICATIVE)
3. CE MANUEL D'INSTALLATION TECHNIQUE REPRESENTE UNE PARTIE DES CONDITIONS GENERALES DE VENTE DE TAL N.V.
4. L'ELECTRO-INSTALLATEUR EST RESPONSABLE POUR L'USAGE DE BALLASTS, TRANSFO'S,...CONFORMES AUX NORMES CE ET EMC EN VIGUEUR.
5. REMPLACEZ TOUJOURS L'AMPOULE (LES AMPOULES) AVEC PRUDENCE; ELLE(-S) EST (SONT) TRES FRAGILE (-S).
6. ATTENTION: NE JAMAIS REMPLACER L'AMPOULE AUX MAINS NUES, UTILISEZ TOUJOURS UN CHIFFON !

INSTALLATION AND MAINTENANCE INSTRUCTIONS IN VIEW OF THE MANUFACTURER'S GUARANTEE.
1. THE CONNECTION AND TESTING OF THE DEVICES SHOULD ALWAYS BE PERFORMED BY A RECOGNIZED ELECTRICIAN.
2. THESE LIGHTING DEVICES NEED TO BE INSTALLED, CONNECTED AND TESTED FOLLOWING THE OFFICIAL NATIONAL INSTRUCTION GUIDE FOR ELECTRICAL INSTALLATIONS (BELGIUM, A.R.E.I., GERMANY: DIN VDE 0100 TEIL 559 A2, ...; THIS ENUMERATION IS JUST AN INDICATION)
3. THIS TECHNICAL ENCLOSURE NEEDS TO BE ADDED TO THE GENERAL SALES CONDITION OF THE TAL N.V.
4. THE ELECTRO TECHNICIAN IS RESPONSABLE TO USE BALLASTS, TRANSFORMERS,...WHICH MEET THE VALID CE AND EMC RULES.
5. ALWAYS REPLACE THE LAMP (-S) WITH UTMOST CAUTIOUSNESS, THE LAMP (-S) IS (ARE) VERY FRAGILE.
6. ATTENTION: NEVER REPLACE THE LAMP WITH BARE HANDS, ALWAYS USE A CLOTH !

MONTAGE- UN UNTERHALT INSTRUCTIONEN ZU BEACHTEN MIT BEZUG AUF DER GARANTIE.
1. DIE MONTAGE , DER ANSCHLUSS UND DAS AUSTESTEN DER LEUCHTEN SOLL IMMER VON EINEM ZUSTA€NDIGEN ELECTRO-INSTALLATEUR AUSGEFUHRT WERDEN.
2. DIESE LEUCHTEN M¾USSEN INSTALLIERT, ANGESCHLOSSEN UND GETESTET WERDEN NACH DER ALLGEMEINEN NAZIONALEN REGLEMENTATION UBER DIE ELEKTRISCHE INSTALLATIONEN (BELGIEN, A.R.E.I., DEUTSCHLAND: DIN VDE 0100 TEIL 559 A2, ...; DIESE AUFSTELLUNG GESCHICHT DURCH EXEMPLATIVEN TITEL UND KANN NICHT ALS LIMITATIV ODER EXHAUTIV BETRACHTET WERDEN).
3. DIESE TECHNISCHE GEBRAUCHSANWEISUNG GEHORT ZU DEN ALLGEMEINEN VERKAUFSBEDINGUNGEN VON TAL N.V.
4. DER ELEKTRO-INSTALLATEUR IST VERANTWORTLICH FUR DAS VERWENDEN VON CE UND EMC GEPRUFTE VORSCHALTGER€ATE.
5. DIE LAMPE(-N) SOLL(-EN) IMMER SERH VORSICHTIG ERSA€TZT WERDEN.
6. VORSICHT: MAN DARF NIE DIE LAMPE MIT DEN NACKTEN HA€NDEN BERUHREN, MAN SOL IMMER EINEN TUCH BENUTZEN !

1 Drill hole in ceiling (10,5mm)

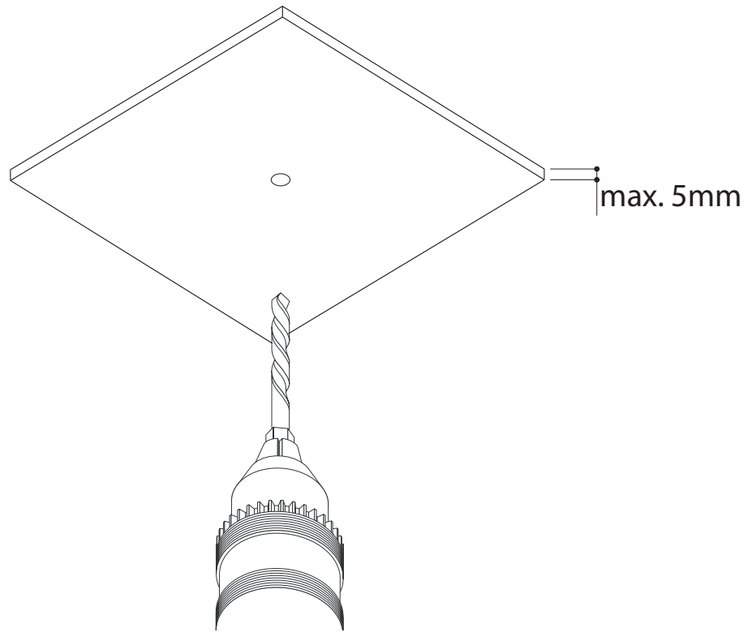

2 Make electrical connection and fix Nobel to ceiling

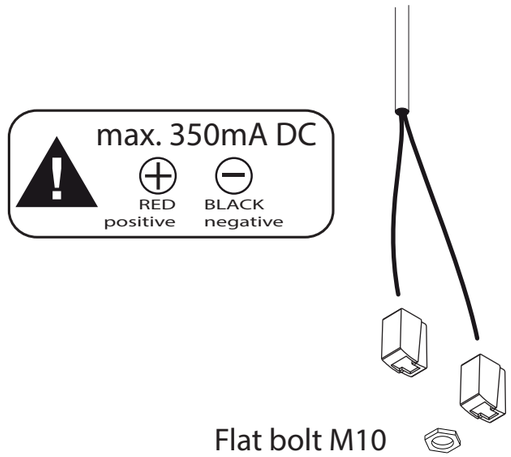

Flat bolt M10

serrated lock washer M10

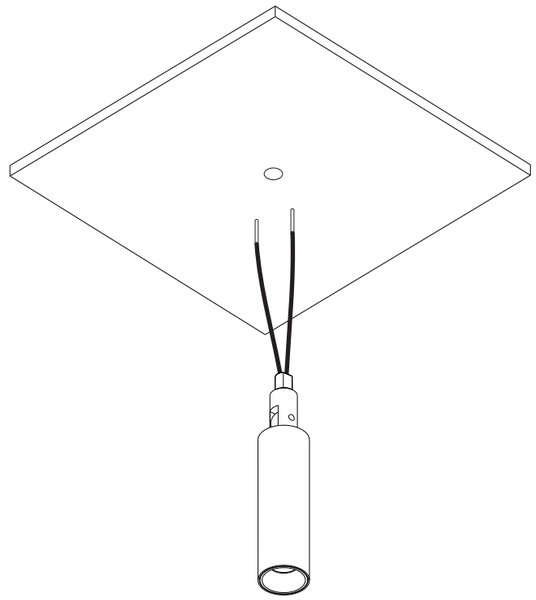

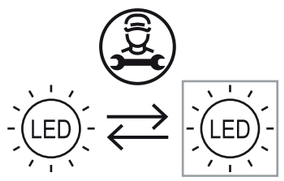

Replaceable (LED only) light source by a professional

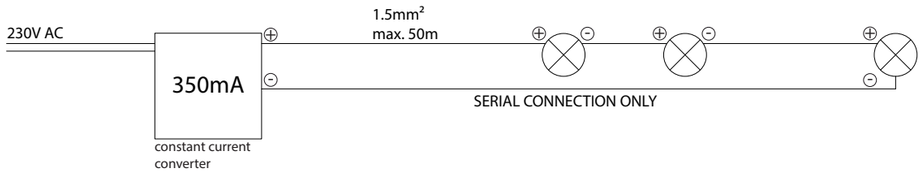

ALWAYS DISCONNECT MAINS POWER SUPPLY FROM CONVERTER BEFORE SWITCHING "ON" LED LUMINAIRES TO PREVENT HOT PLUGGING ISSUES

EXCHANGE ACTIONS TO REPLACE LED-COB

(A) Mounting led-parts into the lampfitting

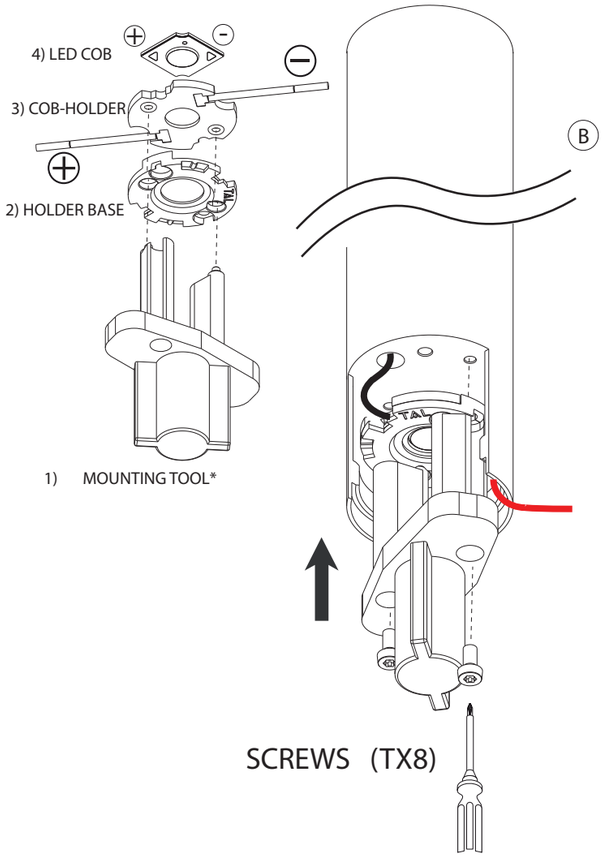

(B) Placing cables against base

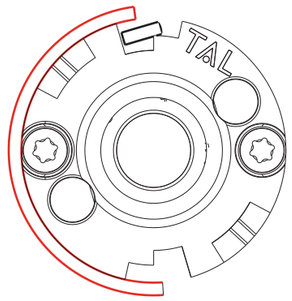

(C) Mounting lensholder

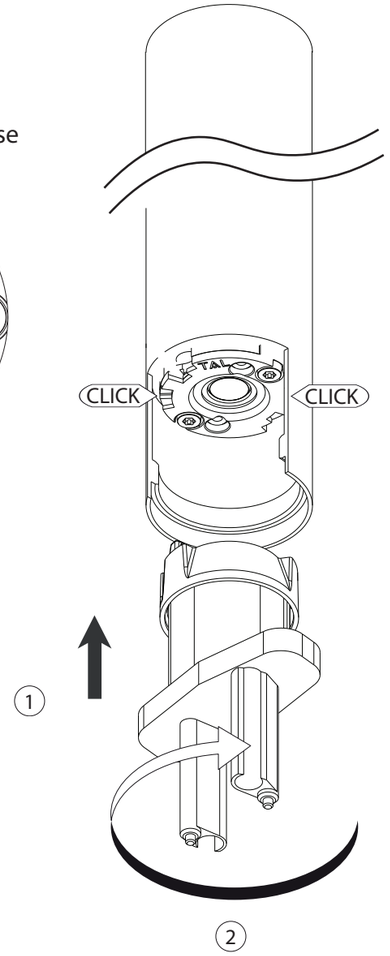

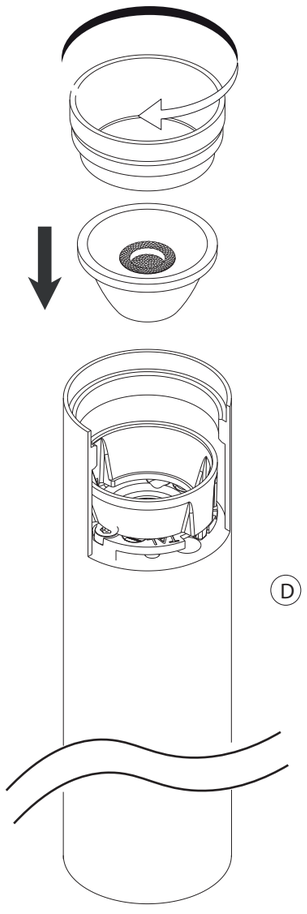

(D) Placing Lens and turn the focusring in the fitting

659567N	NOBEL ELBOW EVO 15° M10 350mA 2700K	CU29+TEXTURED BLACK FOCUS
659547N	NOBEL ELBOW EVO 15° M10 350mA 2700K	TEXTURED WHITE
659596N	NOBEL ELBOW EVO 15° M10 350mA 2700K	BLACK+GOLD
659526N	NOBEL ELBOW EVO 15° M10 350mA 2700K	TEXTURED BLACK
659803N	NOBEL ELBOW EVO 15° M10 350mA 2700K	BRUSHED GOLD ANO
659804N	NOBEL ELBOW EVO 15° M10 350mA 2700K	BRUSHED TITANIUM ANO
659805N	NOBEL ELBOW EVO 15° M10 350mA 2700K	BRUSHED BRONZE ANO
659813N	NOBEL ELBOW EVO 15° M10 350mA 3000K	BRUSHED GOLD ANO
659814N	NOBEL ELBOW EVO 15° M10 350mA 3000K	BRUSHED TITANIUM ANO
659815N	NOBEL ELBOW EVO 15° M10 350mA 3000K	BRUSHED BRONZE ANO
659536N	NOBEL ELBOW EVO 15° M10 350mA 3000K	TEXTURED BLACK
659577N	NOBEL ELBOW EVO 15° M10 350mA 3000K	CU29+TEXTURED BLACK FOCUS
659586N	NOBEL ELBOW EVO 15° M10 350mA 3000K	BLACK+GOLD
659557N	NOBEL ELBOW EVO 15° M10 350mA 3000K	TEXTURED WHITE

659567M	NOBEL ELBOW EVO 36° M10 350mA 2700K	CU29+TEXTURED BLACK FOCUS
659547M	NOBEL ELBOW EVO 36° M10 350mA 2700K	TEXTURED WHITE
659596M	NOBEL ELBOW EVO 36° M10 350mA 2700K	BLACK+GOLD
659526M	NOBEL ELBOW EVO 36° M10 350mA 2700K	TEXTURED BLACK
659803M	NOBEL ELBOW EVO 36° M10 350mA 2700K	BRUSHED GOLD ANO
659804M	NOBEL ELBOW EVO 36° M10 350mA 2700K	BRUSHED TITANIUM ANO
659805M	NOBEL ELBOW EVO 36° M10 350mA 2700K	BRUSHED BRONZE ANO
659813M	NOBEL ELBOW EVO 36° M10 350mA 3000K	BRUSHED GOLD ANO
659814M	NOBEL ELBOW EVO 36° M10 350mA 3000K	BRUSHED TITANIUM ANO
659815M	NOBEL ELBOW EVO 36° M10 350mA 3000K	BRUSHED BRONZE ANO
659536M	NOBEL ELBOW EVO 36° M10 350mA 3000K	TEXTURED BLACK
659577M	NOBEL ELBOW EVO 36° M10 350mA 3000K	CU29+TEXTURED BLACK FOCUS
659586M	NOBEL ELBOW EVO 36° M10 350mA 3000K	BLACK+GOLD
659557M	NOBEL ELBOW EVO 36° M10 350mA 3000K	TEXTURED WHITE

659567W	NOBEL ELBOW EVO 50° M10 350mA 2700K	CU29+TEXTURED BLACK FOCUS
659547W	NOBEL ELBOW EVO 50° M10 350mA 2700K	TEXTURED WHITE
659596W	NOBEL ELBOW EVO 50° M10 350mA 2700K	BLACK+GOLD
659526W	NOBEL ELBOW EVO 50° M10 350mA 2700K	TEXTURED BLACK
659803W	NOBEL ELBOW EVO 50° M10 350mA 2700K	BRUSHED GOLD ANO
659804W	NOBEL ELBOW EVO 50° M10 350mA 2700K	BRUSHED TITANIUM ANO
659805W	NOBEL ELBOW EVO 50° M10 350mA 2700K	BRUSHED BRONZE ANO
659813W	NOBEL ELBOW EVO 50° M10 350mA 3000K	BRUSHED GOLD ANO
659814W	NOBEL ELBOW EVO 50° M10 350mA 3000K	BRUSHED TITANIUM ANO
659815W	NOBEL ELBOW EVO 50° M10 350mA 3000K	BRUSHED BRONZE ANO
659536W	NOBEL ELBOW EVO 50° M10 350mA 3000K	TEXTURED BLACK
659577W	NOBEL ELBOW EVO 50° M10 350mA 3000K	CU29+TEXTURED BLACK FOCUS
659586W	NOBEL ELBOW EVO 50° M10 350mA 3000K	BLACK+GOLD
659557W	NOBEL ELBOW EVO 50° M10 350mA 3000K	TEXTURED WHITE