TAL nv
Moortelmeers 23
B-8740 PITTEM
BELGIUM

T: +32(0)51 46 43 41
F: +32(0)51 46 43 42
E: info@tal.be
www.tal.be

MADE IN BELGIUM 13/03/2024 - VERSION 1

MX200090	MIX 26W HONEYCOMB BLACK

REMOVE LEDMODULE BY TURNING COUNTER CLOCKWISE

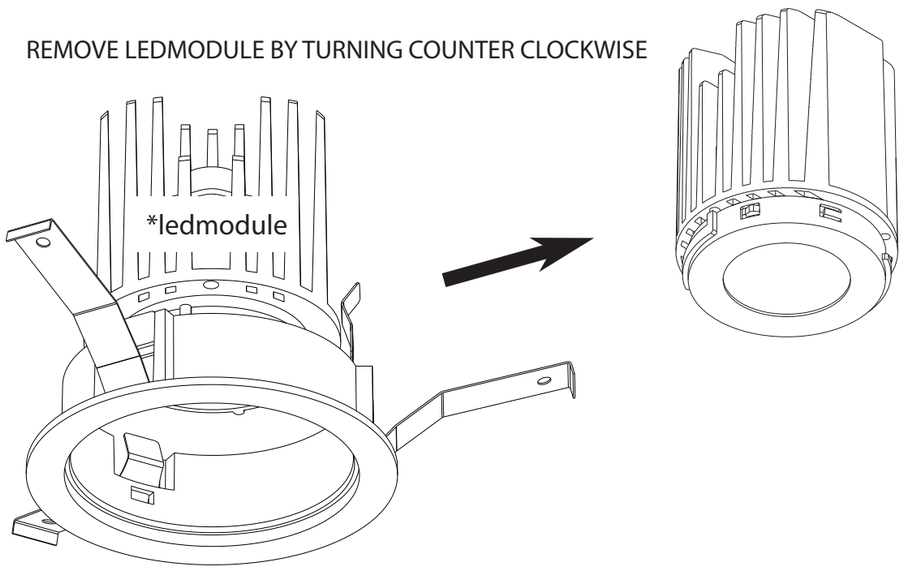

MX200090: HONEYCOMB

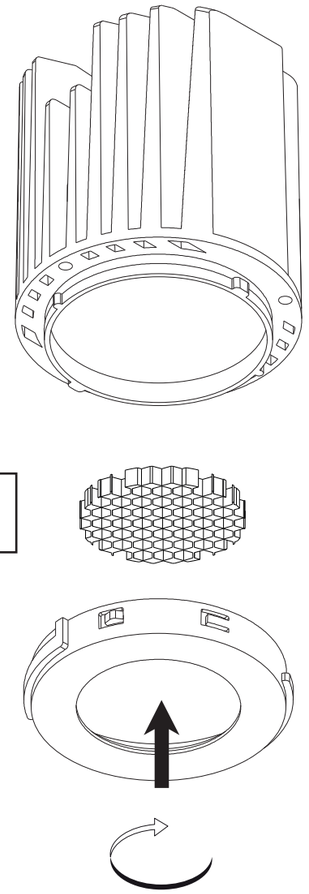

Compatible with:
26W MIX MODELS

REMOVE LENSRING

FIX HONEYCOMB IN LENSRING

PUT LENSRING BACK ON LEDMODULE

PUT LEDMODULE BACK ON MIX 26W